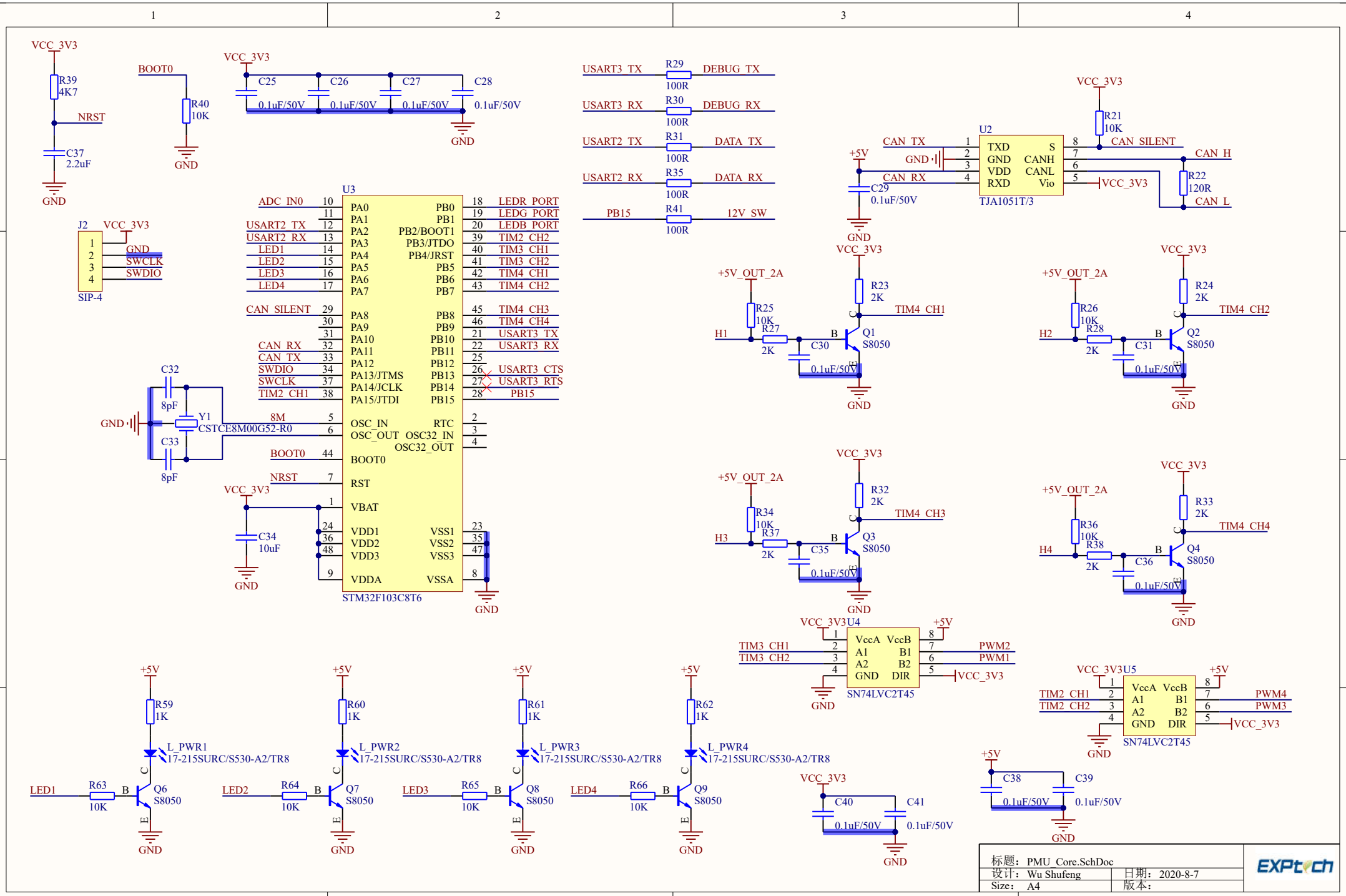
VCC_3V3
R39
4K7
NRST
C37
2.2uF
GND
BOOT0
R40
10K
C25
C26
C27
C28
0.1uF/50V
USART3_TX
R29
100R
DEBUG_TX
USART3_RX
R30
DEBUG_RX
USART2_TX
R31
DATA_TX
USART2_RX
R35
DATA_RX
PB15
R41
12V_SW
U2
TXD
GND
VDD
RXD
S
CANH
CANL
Vio
TJA1051T/3
CAN_TX
CAN_RX
CAN_SILENT
CAN_H
CAN_L
R21
10K
R22
120R
+5V
C29
J2
SIP-4
SWCLK
SWDIO
U3
STM32F103C8T6
ADC_IN0
LED1
LED2
LED3
LED4
CAN_SILENT
CAN_RX
CAN_TX
SWDIO
SWCLK
TIM2_CH1
LEDR_PORT
LEDG_PORT
LEDB_PORT
TIM2_CH2
TIM3_CH1
TIM3_CH2
TIM4_CH1
TIM4_CH2
TIM4_CH3
TIM4_CH4
USART3_TX
USART3_RX
USART3_CTS
USART3_RTS
PB15
C32
C33
8pF
Y1
CSTCE8M00G52-R0
8M
C34
10uF
+5V_OUT_2A
R25
10K
R23
2K
R27
2K
H1
C30
0.1uF/50V
Q1
S8050
R26
10K
R24
2K
R28
2K
H2
C31
Q2
R34
10K
R32
2K
R37
2K
H3
C35
Q3
R36
10K
R33
2K
R38
2K
H4
C36
Q4
U4
SN74LVC2T45
VccA
VccB
A1
B1
A2
B2
DIR
PWM2
PWM1
PWM4
PWM3
R59
1K
R60
R61
R62
L_PWR1
L_PWR2
L_PWR3
L_PWR4
17-215SURC/S530-A2/TR8
R63
R64
R65
R66
10K
Q6
Q7
Q8
Q9
C40
C41
C38
C39
标题：PMU_Core.SchDoc
设计：Wu Shufeng
日期：2020-8-7
Size：A4
版本：
EXPtech